IAHR AIRH

REPRINT

INTERNATIONAL SYMPOSIUM on RIVER MECHANICS

9 - 12 JANUARY 1973

Asian Institute of Technology
Bangkok, Thailand

ACKNOWLEDGMENT

The research results given in this report were supported in part by funds provided by the U. S. Department of Interior, Office of Water Resources Research under Grant No. B-064-COLO; Colorado State University Experiment Station Project 124 and from the Agricultural Research Service under the Northern Plains Branch, Soil and Water Conservation Research Division.

INTERNATIONAL ASSOCIATION FOR HYDRAULIC RESEARCH
INTERNATIONAL SYMPOSIUM ON RIVER MECHANICS
9-12 January 1973 Bangkok, Thailand

LARGE MATERIAL MODELS IN WATERSHED HYDROLOGY RESEARCH

D.A. WOOLHISER
Research Hydraulic Engineer
United States Department of Agriculture
Fort Collins, Colorado

E.F. SCHULZ
Associate Professor Civil Engineering
Colorado State University
Fort Collins, Colorado

SYNOPSIS

The results from both material and symbolic models must be merged to obtain a maximum insight into the behavior of the hydrologic systems. A large-scale experimental rainfall-runoff facility is described. The application of the symbolic model known as the kinematic mathematical model to the experimental results is shown. The frictional resistance to flow is defined by a four-parameter law. The necessity for a large-scale material model is shown by means of a diagram delineating the laminar-turbulent regimes on an X-T solution domain.

INTRODUCTION

Many discussions of hydrologic modeling have appeared in the literature in the last decade. However, we feel that the rationale for model building was best expressed by Rosenblueth and Wiener (1945) over 20 years ago:

> No substantial part of the universe is so simple that it can be grasped and controlled without abstraction. Abstraction consists in replacing the part of the universe under consideration by a model of similar but simpler structure. Models, formal or intellectual on the one hand, or material on the other, are thus a central necessity of scientific procedure.

A formal model is a symbolic, usually mathematical, representation of an idealized situation which has the important structural properties of the real system. A material model is a physical representation of a complex

system by a model system which is assumed to be simpler and is also assumed to have some properties similar to those of the prototype system.

A watershed is an extremely complicated system which we cannot hope to understand and control without the use of models. Recent emphasis in hydrologic research has been on formal or mathematical models. Every mathematical model involves a structure that can be described by a set of linked ordinary or partial differential equations. The nature of the watershed might be described by the linkage and type of equations used; local characteristics are specified by model parameters: coefficients, exponents and thresholds.

The choice of a mathematical model structure is presently quite subjective. The general approach has been to describe the behavior of components of the hydrologic cycle in terms of inputs, outputs and storages and then to describe the linkage between components. Parameter values are then obtained by a trial and error process or an optimization procedure utilizing concurrent records of rainfall and runoff. This approach is satisfactory if the behavior of the components is well-known. If component behavior is known only for very special cases, experimentation with a material model may be desirable.

Material models may involve a change in space or time scale or may simply enable experiments to be carried out under more favorable conditions than would be available in the original system. Experiments on a natural watershed are very time consuming and the investigator has no control over the inputs. The physical size of the system is also a problem; so for practical reasons, some investigators attempted to model hydrologic systems utilizing a change in scale (Chery, 1966). They found that this was not a viable approach and Grace and Eagleson (1966) demonstrated that scale models are possible only in very special cases.

A material model that does not involve a change in scale may still be valuable because experiments may be carried out more conveniently or can be repeated at will. The experimental watershed systems at the University of Illinois (Chow, 1967), Kyoto University (Yano and Ishihara, 1969) and at Colorado State University (Holland, 1969) are considered to be of prototype scale.

With prototype scale models the question of size is still important. Obviously a very large model is more expensive and more difficult to operate than a small one. The important consideration is that the material model

must duplicate the most important characteristics of the complex system. If it does not, it cannot give important insights into real system behavior.

Because a material model and a mathematical model of a watershed must share the most important properties of the complex system, the mathematical model must also be an adequate representation of the material model. In other words, if a mathematical model does not adequately describe a simple material model, it probably will not adequately describe a more complex situation. This is no doubt a necessary condition but it certainly is not sufficient if the material model is grossly oversimplified or is too small to exhibit important scale-dependent behavior. We define a large material model as one that exhibits all important scale-dependent behavior.

In the remainder of this paper we demonstrate the importance of this concept by considering some of the information obtained from the Rainfall-Runoff Experimental Facility at Colorado State University.

DESCRIPTION OF RAINFALL-RUNOFF FACILITY

The experimental watershed consists of a conic sector having an interior angle of 104° and a radius of 116 feet. Two 88-foot by 70-foot long intersecting plane surfaces join the edges of the conic sector as shown in Fig. 1. The watershed surface was carefully graded to a 5% slope and the surface was covered by a fabric-reinforced butyl rubber sheet to protect the surface against erosion and to prevent infiltration. This made a relatively smooth, uniform surface. The runoff is measured in an H-flume (USDA, 1962) at the outflow from the conic sector or at the outflow from the combined surfaces.

The uniformly distributed rainfall is created by 330 sprinkler nozzles, each mounted on a pipe riser 10 feet above the watershed as shown in Fig. 2. When operated at 28 psi, each nozzle has an effective radius of 40 feet. The basic pattern used in locating the nozzles was a triangular network composed of equilateral triangles having 40-foot sides. A nozzle at each corner would produce rainfall having a closely uniform intensity of distribution of approximately 0.5 inch per hour. Rainfall of higher intensity is created by overlapping additional triangular nozzle networks. Rainfall intensities of approximately 0.1, 1.0, 2.0 and 4.0 inches per hour are possible under these conditions. The

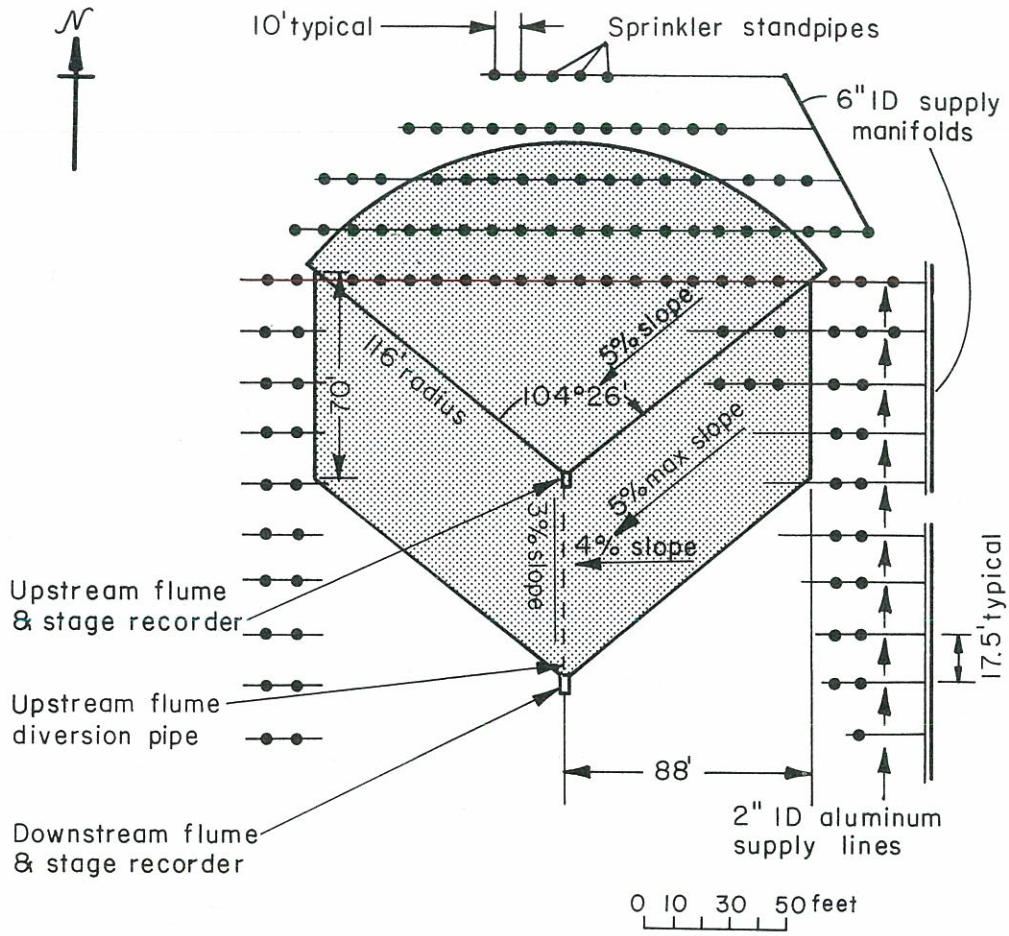

Area of impervious surface

Upstream conic sec or	= 12,700 sq. ft.
Two planes	= 12,300 sq. ft.
Total	= 25,000 sq. ft.

Figure 1.--Plan view Colorado State University Rainfall-Runoff Experimental Facility.

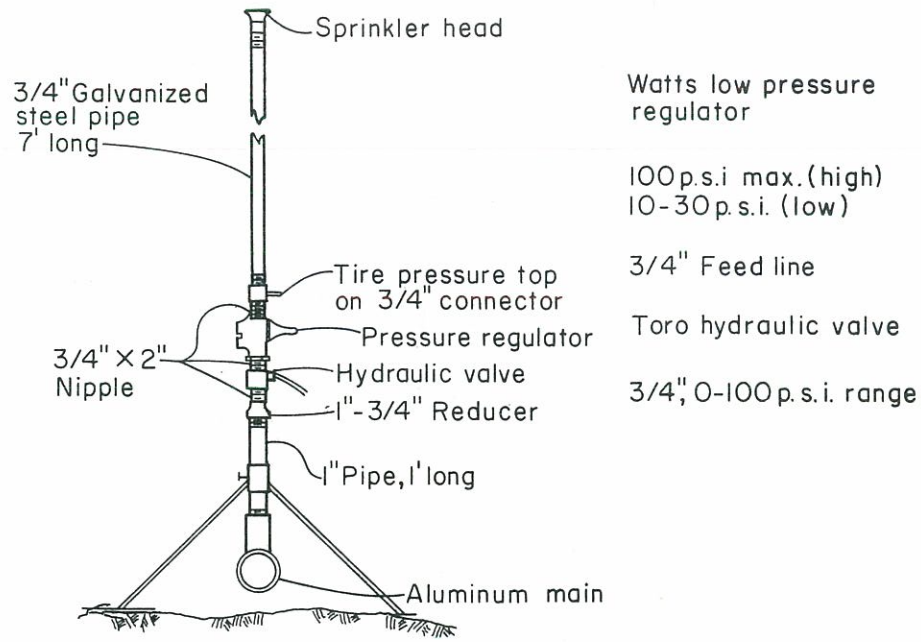

Figure 2.--Sprinkler riser assembly.

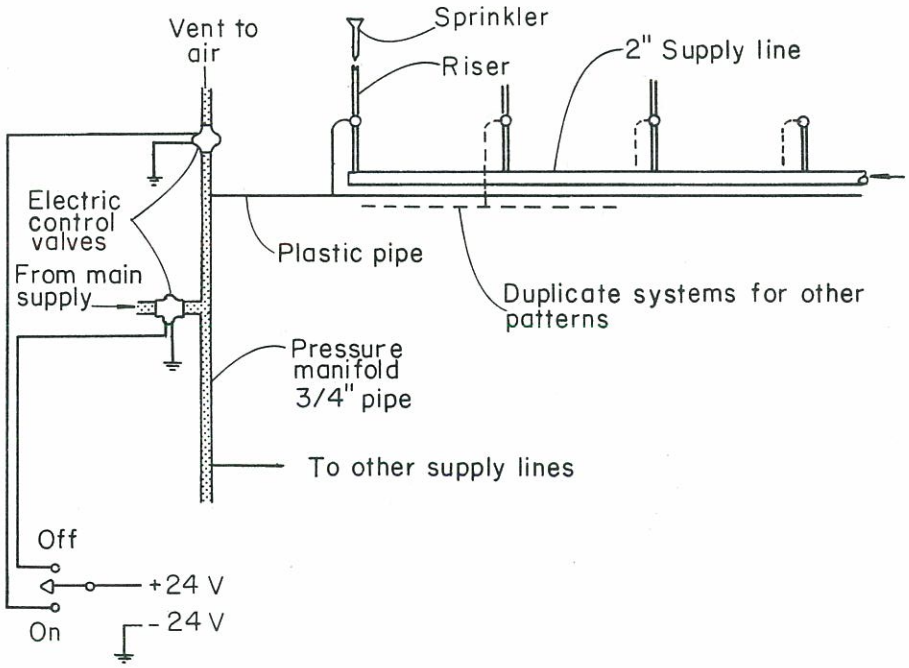

Figure 3.--Schematic of hydraulic control system for sprinklers.

coefficient of variation varies from 0.2 (20%) at 0.5 inches per hour to 0.05 (5%) at 4.0 inches per hour.

Water is supplied to the rainfall simulators from a large reservoir located at about 100 feet higher elevation. The individual nozzles are supplied through a 2-inch diameter aluminum pipe with nozzles installed at 10-foot intervals along the length of the pipeline. These 2-inch pipelines traverse the watershed laterally at 17.5-foot intervals. The 2-inch aluminum mains are supplied from a 6-inch aluminum pipeline which in turn is connected to a 10-inch underground pipeline leading from the reservoir. Each nozzle is fitted with a pressure regulator and a hydraulic cut-off valve. By manipulating the pressure to the hydraulic valve, the operation of the nozzles can be remotely controlled as shown in Fig. 3.

The runoff hydrograph is measured in either a 1.5-foot H-flume (USDA, 1962) at the upstream station or a 2.0-foot H-flume at the downstream station. The stage in the flume is recorded on a FW-1 float operated water stage recorder modified to produce an expanded time scale.

KINEMATIC MATHEMATICAL MODEL FOR A CONVERGING SECTION

Our initial investigations have concentrated on developing a satisfactory model for unsteady overland flow on the converging portion of the watershed (see Fig. 4). We have assumed that the kinematic approximation is valid for flow on this section. The kinematic wave equations are:

$$\frac{\partial h}{\partial t} + \frac{\partial uh}{\partial x} = q(t) + \frac{uh}{(L_0 - x)} \tag{1}$$

and

$$u = \alpha h^{n-1} \tag{2}$$

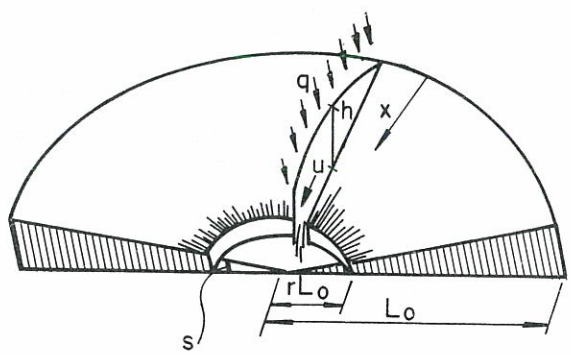

Fig. 4--Definition sketch of flow on a converging surface.

when h = depth, u = mean velocity, q(t) = the lateral inflow rate, L_0 = radius of the converging section and α and n are parameters of the friction relationship. For the Darcy-Weisbach form, $\alpha = \sqrt{\frac{8g}{f} S_0}$ and n = 3/2 where S_0 is the slope, f is a friction factor and g is the acceleration of gravity. For laminar undisturbed flow on a smooth surface f = 24/R where R is the Reynolds number.

Equations (1) and (2) can be written in a dimensionless form and a dimensionless rising and recession hydrograph obtained for each convergence parameter r (see Fig. 5) provided that α and n are not functions of x for all t. If there is a transition from laminar to turbulent flow such single dimensionless hydrographs cannot exist. An examination of dimensionless hydrographs obtained for a butyl rubber surface and for a butyl surface covered with four different densities of gravel demonstrated that the laminar-turbulent transition is an important phenomenon in the experimental watershed [Woolhiser, Holland, Smith and Smith (1971)]. Laboratory studies by others, Kisisel (1971) and Li (1972), demonstrate that raindrop impact affects the friction factor for laminar flow with depths greater than approximately 0.01 ft. Based upon this information, a friction model of the following form was proposed:

$$f = \frac{K_o + aq}{R} \text{ when } R < \frac{(K_o + aq)R_T}{K_o} \qquad (3)$$

$$f = K_o/R_T \qquad \text{otherwise}$$

where K_o is dependent on the surface characteristics and has a minimum value of 24 for smooth planes, and R_T is a transition Reynolds number.

A recent study by Correia (1972) and earlier work by Izzard and Augustine (1943) show that very shallow flow disturbed by rainfall could be more closely described by a turbulent law than a disturbed laminar law. Accordingly, a more comprehensive friction law is shown in Table 1. This law accounts for the fact that mean depths of flow much less than 0.01 ft. are found on the upper slopes of watersheds, hence the laboratory work only presents part of the situation.

The friction law specified in Table 1 has four parameters--f_r, K_o, a and R_T--and agrees qualitatively with observational data from the

CSU Experimental Rainfall-Runoff Facility and with laboratory data.

TABLE 1.--OVERLAND FLOW FRICTION LAW

q	R	f	
$q > 0$	$< \frac{K_o + aq}{f_r}$	f_r	Disturbed Turbulent
	$> \frac{K_o + aq}{f_r} < \left(\frac{K_o + aq}{K_o}\right) R_T$	$\frac{K_o + aq}{R}$	Disturbed Laminar
	$> \left(\frac{K_o + aq}{K_o}\right) R_T$	K_o/R_T	Turbulent
$q = 0$	$< R_T$	K_o/R	Laminar
	$> R_T$	K_o/R_T	Turbulent

Because there is no direct way to measure these friction law parameters in the field, data from large material models can be utilized to see if optimization techniques will lead to consistent sets of parameters. Such experiments would be impossible with smaller experimental systems because the laminar-turbulent transition would either not exist or would have a rather weak effect. The regions of each type of flow are shown in Fig. 6.

Within the range of realistic rainfall rates, the presence of some of these flow domains depends on the scale of the system. Very short planes may exhibit only disturbed turbulent and laminar behavior. Laboratory studies with a base flow at the upper end exhibit disturbed-laminar, laminar and turbulent behavior, but the flow depth is sufficiently great that disturbed turbulent flow is not observed.

Fawkes (1972) utilized the kinematic model with the alternative friction models specified by equation (3) and Table 1 to compute outflow hydrographs. Model parameters were estimated by utilizing the Rosenbrock (1960) optimization method with a normalized sum of squares of deviations between observed and computed hydrographs as the objective function. On the basis of goodness of fit for optimization runs and for independent predictions of hydrographs using average optimized parameter values, Fawkes concluded that neither of the friction laws as given by equation (3) (Law A)

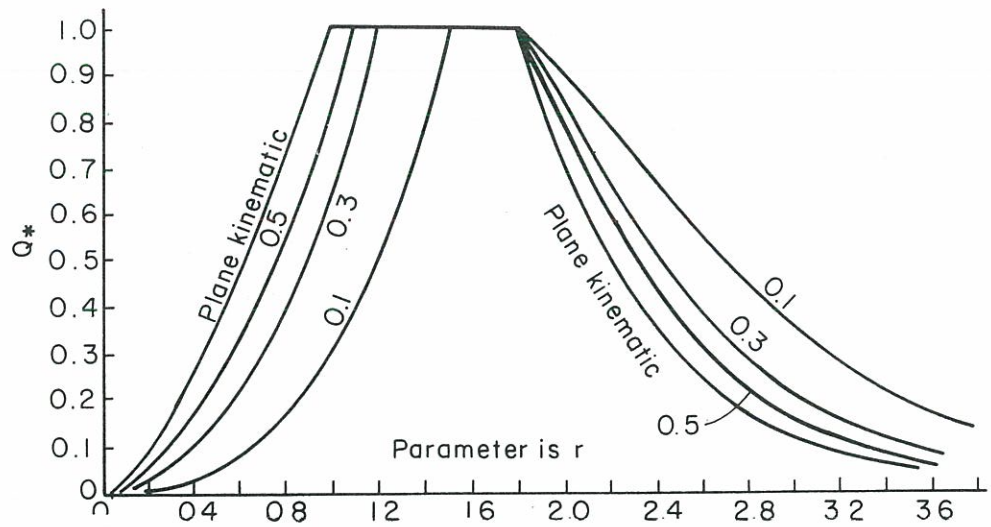

Figure 5.--Rising hydrograph and recession from equilibrium.

(From Woolhiser, 1969)

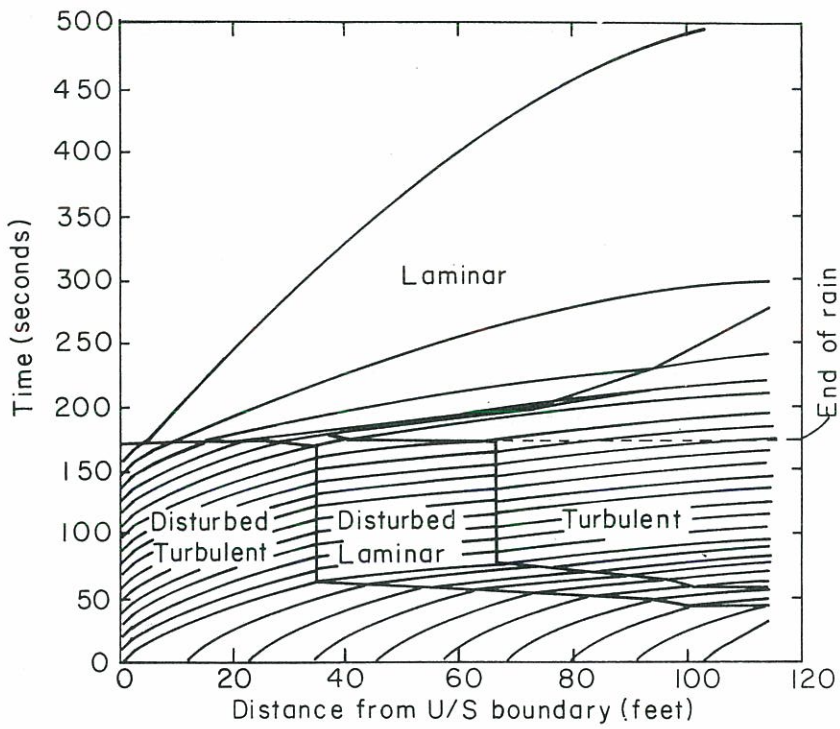

Figure 6.--Laminar and turbulent flow regimes - typical x-t characteristics. (From Fawkes, 1972).

or Table 1 (Law B) was consistently better than the other. However, for runs where the butyl surface was covered with 1 1/2-inch diameter gravel at a high rate (50 lbs/sq.yd.), Law A was consistently better, possibly indicating that the gravel intercepted most kinetic energy of the raindrops, thus eliminating the "disturbed turbulent" regime.

Other investigations underway at CSU include the effect of spatial variations in the roughness characteristics on watershed response, and effect of rills and microchannels on friction characteristics. In the future we hope to cover the surface with soil to investigate combinations of overland flow and porous media flow.

Large material models of a watershed seem to have several other advantages:

1. Some nonuniformity in the simulated rainfall input can be tolerated if the scale of nonuniformity is small relative to watershed size.
2. Equipment for measuring runoff rates does not need to be as sensitive as would be required for smaller models.
3. Combinations of overland flow and porous media flow can be examined without scaling problems.

The disadvantages of large models include the quantities of material required and the time required to change configuration of the watershed. In cold climates, outdoor models can be operated only during the summer.

SUMMARY AND CONCLUSIONS

Large material models used in conjunction with mathematical models are very useful in understanding and predicting watershed behavior. The rainfall-runoff experimental facility at Colorado State University and the kinematic model for converging overland flow are considered as an example of this type of research approach. It is demonstrated that small material models of watersheds may be misleading because they ordinarily will not exhibit certain flow phenomena that are important in "real-world" hydrologic systems.

REFERENCES

1. Chery, D. L. "Design and tests of a physical watershed model." Journ. of Hydrology, Vol. 4, pp. 224-235, 1966.
2. Chow, Ven-te. "Laboratory study of watershed hydrology." Proc. Int'l Hydrol. Symp., Fort Collins, Colo. Vol. 1, pp. 194-202. 1967.
3. Correia, Mario L. "An experimental study of the mean characteristics of steady, spatially varied overland flow under rainfall impact." Unpublished report Colorado State University, May 1972.
4. Fawkes, P. E. "Roughness in a model of overland flow." M.S. Thesis, Civil Engineering Department, Colorado State University, 1972.
5. Grace, R. A. and P. S. Eagleson. "The use of scale models in rainfall-runoff studies." Water Resources Res. Vol. 2, No. 3, pp. 393-403, 1966.
6. Holland, M. E."Design and testing of rainfall system." Colorado State University, Department of Civil Engineering Report CER 69-70MEH 71, November, 1969.
7. Izzard, C. F. and M. T. Augustine. "Preliminary report on analysis of runoff resulting from simulated rainfall on a paved plot," Trans. Amer. Geophys. Union,Vol. 24, pp. 500-511, 1943.
8. Kisisel, Ismail Tarik. "An experimental investigation of the effect of rainfall on the turbulence characteristics of shallow water flow," Ph.D. Thesis, Purdue University, 1971.
9. Li, Ru-Ming. "Sheet flow under simulated rainfall," M.S. Thesis, Civil Engineering Department, Colorado State University, 1972.
10. Rosenblueth, Arturo and Norbert Wiener. "The role of models in science," Philosophy of Science XII, No. 4, pp. 316-321, October 1945.
11. Rosenbrock, H. H. "An automatic method of finding the greatest or least value of a function." Computer Journ. Vol. 3, pp. 175-184, 1960.
12. U. S. Dept. of Agriculture. "Field manual for research in agricultural hydrology." Agr. Handbook No. 224, June 1962.
13. Woolhiser, D. A. "Overland flow on a converging surface." Trans. ASAE, Vol. 12, No. 4, pp. 460-462, 1969.
14. Woolhiser, D. A., M. E. Holland, G. L. Smith and R. E. Smith. "Experimental investigations of converging overland flow." Trans. ASAE, Vol. 14, No. 4, pp. 684-687, 1971.

REFERENCES (continued)

15. Yano, K. and Yasuo Ishihara. "Experimental facility for research of river disaster." Journ. Disaster Prevention Research. Inst. No. 12B. March, 1969, pp. 237-246.