INTERNATIONAL HYDROLOGY SYMPOSIUM
Fort Collins, Colorado, U.S.A.
September 6-8, 1967

GENERAL REPORT

by

David A. Woolhiser*

Symposium Subject: New ideas and scientific methods in deterministic (parametric, dynamic, physical or analytical) hydrology.

The papers discussed in this general report are given in the pre-Symposium Volume of Proceedings. The paper numbers, authors and titles are as follows:

Paper Number	Author and Title
26	Chow, V. T., Laboratory Study of Watershed Hydrology
27	Jobling, G. A., and A. K. Turner, The Simulation of Infiltration for Studies in Overland Flow
28	Thirriot, C., and J. P. Villeneuve, Consideration Sur La Fonction De Transfert Des Milieux Poreux
29	Holtan, H. N., C. B. England, and W. H. Allen, Jr., Hydrologic Capacities of Soils in Watershed Engineering
30	Ibrahim, H. A., and W. Brutsaert, The Recovery of the Infiltration Capacity After Drainage
31	Ragan, R. M., The Determination of Local Inflows Entering a Channel
32	Dickinson, W. T., An Error Model for a Single Discharge Measurement

* Research Hydraulic Engineer, Agricultural Research Service, USDA, Soil and Water Conservation Research Division, Northern Plains Branch, Fort Collins, Colorado.

The papers that have been assigned to me as a general reporter illustrate very well the number of new ideas and the diversity of research approaches that make modern hydrology a vital and exciting field.

In general we can make no deterministic statements regarding the occurrence, circulation and distribution of water in a hydrologic system at any particular time. Because the output of a watershed, runoff, is related to at least one stochastic input, precipitation, the runoff process is stochastic and can only be described in terms of probability laws. However, if the initial conditions of the watershed system are known and the input is specified as a deterministic function of time, the output is also deterministic. As I view it, deterministic hydrology refers to the development of models for each component of a watershed and integration of these components into a complex system. Such models promise to be very useful both as a means of understanding hydrologic phenomena and as tools in water resource system design. The development of objective criteria for determining the degree of complexity of hydrologic models is an important research problem in deterministic hydrology. While abstraction is necessarily involved in building a model of nature, the parameters in the systems of equaitons which make up these models must have physical significance if they are to be anything more than complicated curve-fitting devices.

In his laboratory study of watershed hydrology, Chow[1] is making a frontal attack on many of the currently important hydrologic problems. Most of his paper is devoted to a description of the Watershed Experimentation System, the rationale behind its construction and some of the research tactics that have been used or are proposed.

The watershed experimentation system is a laboratory device for studying unsteady, free-surface, hydraulic problems. Chow has coined the term watershed hydraulics to distinguish it from the hydraulics of overland flow and open channel hydraulics. This would appear to be a logical step if there are strong interactions between overland flow and open channel flow in the watershed system. There is evidence, however, that in most cases overland flow can be treated as a kinematic wave problem[2]. In these circumstances the overland flow portion can be separated from the channel flow problem because no downstream boundary condition is needed to solve the overland flow problem. While the overland flow affects channel flow, the reverse is not true. Consequently, the general problem reduces to unsteady flow in branching channels with lateral inflow. Although this problem differs in geometrical complexity from the usual problems treated in open channel flow, there is no fundamental difference.

Putting aside the question of terminology, it is obvious that the laboratory watershed described by Chow will provide opportunities to study unsteady flow in a number of geometrically different systems. It appears to be a powerful tool in testing purely mathematical models of watershed hydraulics and also in testing the applicability of lumped system models (linear or nonlinear) over the range of prototype sizes that can be accommodated.

---

[1] V. T. Chow, "Laboratory Study of Watershed Hydrology," International Hydrology Symposium, Paper No. 26.

[2] D. A. Woolhiser and J. A. Liggett, "Unsteady, One-Dimensional Flow Over a Plane - The Rising Hydrograph," Water Resources Research (In Press).

Studies of surface runoff on small prototypes without spatial variation in rainfall will unquestionably answer some interesting hydraulic and hydrologic questions. When spatial variation of rainfall is introduced, however, modeling is necessarily involved. The same conclusion can be reached with regard to saturated flow which is quite likely to be of little consequence on 40- x 40-foot prototype watersheds.

Jobling and Turner[3] have described an interesting method of experimentally simulating infiltration in a tilting flume.

The implications of their method are more easily understood if their equations are written in a dimensionless form. Define the following dimensionless variables.

$$h_* = \frac{h}{H + H^*} \quad ; \quad t_* = \frac{t}{t_o} \quad ; \quad A^* = \frac{A_2(h)}{A_1} \tag{1}$$

where $$t_o = \frac{H + H^*}{\sqrt{2g\ (H + H^*)}}$$

and $A_2(h)$ is the area of container 2 expressed as a function of the depth h. The other variables have been defined by Jobling and Turner.

When the dimensionless variables are inserted into equations (27-6) and (27-8)[4] with H^*, the downward displacement of container 2 included, the dimensionless area A^* can be solved for explicitly as a function of h_* and two dimensionless parameters. When $\alpha = 0.5$ the following equation results:

$$A^* = \frac{A_1\ K^2}{c_1\ a_1}\ [32g\ (H + H^*)^3]^{-\frac{1}{2}}\ \{(1 - h_*)^{-3/2} - \frac{c_2\ a_2}{c_1\ a_1}\ \frac{h_*^{\frac{1}{2}}}{(1 - h_*)^2}\} \tag{2}$$

This equation has been plotted in Fig. 1 for several values of the parameter $\frac{a_2}{a_1}$ assuming that $c_1 = c_2$. This figure shows that if $c_1 = c_2$ and the ratio a_2/a_1 is taken to be near 0.5 or 0.6 then the area of a container 2 is very nearly constant over the range $0 \leq h_* < 0.75$. Furthermore if different depths of channel flow, H, are to be investigated, the dimensionless parameter $\frac{A_1\ K^2}{c_1\ a_1}\ \left[32g\ (H + H^*)^3\right]^{-\frac{1}{2}}$ can be kept constant by an appropriate choice of H^*.

---

[3] G. A. Jobling and A. K. Turner, "The Simulation of Infiltration for Studies in Overland Flow," International Hydrology Symposium. Paper No. 27.

[4] Equation (27-6) refers to equation 6 in Paper No. 27.

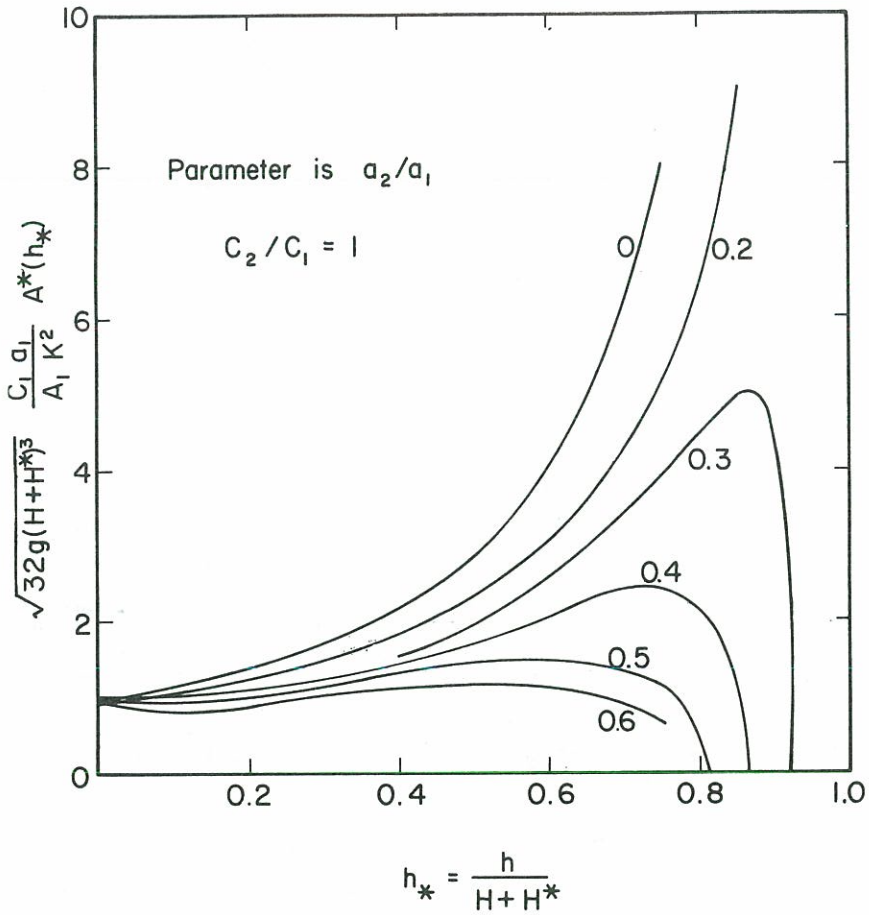

FIGURE 1

Dimensionless Relationship between A^* (h_*) and h_*

Consequently, the area of container 2 can remain a constant and the Kostiakov expression with $\alpha = 0.5$ will be very closely approximated.

While the apparatus described by the authors can simulate infiltration for steady flows (H = const.), it appears that this case would be very infrequent in the study of overland flow or surface irrigation. The resulting infiltration rate will be quite responsive to depth of flow and will no longer resemble the Kostiakov expression. Apparently the only way to circumvent this difficulty with this equipment is to choose H^* very large in comparison with the maximum depth of flow. In this manner the apparatus can be made relatively insensitive to changes in depth of flow, and infiltration from unsteady flow conditions could be approximated.

Ibrahim and Brutsaert[5] have approached the infiltration problem in a mathematically rigorous manner by beginning with the partial differential equations describing flow in unsaturated porous media. They have obtained solutions to these equations by numerical methods and have examined the effect of hysteresis in the moisture-suction relationship on the solutions. They have also recognized that while the solution to this equation gives physically meaningful results, these methods will very likely be used to investigate properties of the solutions rather than as a means of simulating infiltration for whole watersheds. Consequently, they have related their solutions to empirical equations proposed previously. By so doing, they have been able to establish ranges of validity for certain of these equations.

It would have been desirable for the authors to have selected a normalizing length which expressed some fundamental property of the medium and the fluid rather than the depth increment Δz which is quite arbitrary. Corey, Corey and Brooks[6] used the length $L_o = P_b/\rho g$ as the normalizing length where P_b is the bubbling pressure for the given medium and liquid, and as usual ρ is the fluid density and g is the acceleration of gravity.

It would be interesting to convert the results of Ibrahim and Brutsaert to a dimensionless form with length normalized using the "bubbling pressure" for comparison with future studies.

The authors' statement ". . . the controversy about the exact value of n . . . at least for the infiltration problem . . . may be considered as resolved." is not adequately supported by the material presented in the paper.

According to an analysis by Brooks and Corey[7], $n = 3 + 2/\lambda$ where λ is a positive parameter of the pore-size distribution. The minimum value n can assume is therefore approximately 3, which could occur for a medium with very uniform pore size. Because λ becomes small as the variability of the pore size increases, n has no apparent upper limit. It appears that the value of n for most soils lies between 3 and 4, however, Brooks and Corey presented data for highly aggregated Pullman clay loam which indicate an n value of 7.2.

---

[5] H. A. Ibrahim and W. Brutsaert, "The Recovery of the Infiltration Capacity after Drainage," International Hydrology Symposium. Paper No. 30.

[6] G. L. Corey, A. T. Corey, and R. H. Brooks, "Similitude for Non-steady Drainage of Partially Saturated Soils." Hydrology Paper No. 9. Colorado State University, Fort Collins, Colorado, August 1965.

[7] R. H. Brooks and A. T. Corey, "Properties of Porous Media Affecting Fluid Flow." Proc. ASCE Vol. 92, No. IR2. June 1966, pp. 61-88.

A subsequent computer run on Ibrahim and Brutsaert's model with $n = 3$ indicated that the solution is indeed insensitive to the magnitude of n for $3 < n < 4$[8]. It appears that the variability of n is unimportant for the infiltration problem for most soils.

Ibrahim and Brutsaert's investigation into the recovery of infiltration capacity after drainage is very promising. The research strategy of obtaining solutions to the theoretical equations and then attempting to relate properties of these solutions by empirical means can be very fruitful. Empirical equations obtained in this manner can then serve as the mathematical model to be used in analyzing field data.

Holtan, England and Allen[9] have taken the approach that an infiltration model based upon currently available soils information is needed as a tool in watershed engineering. They propose a lumped parameter model consisting of three storages, the contents of which are q_1, q_2, and q_3 (see Fig. 2). q_1 represents the volume of water in depression storage, q_2 is the volume of water held by capillary attraction above an impeding layer and q_3 is the volume of gravity water above the impeding layer

The precipitation input to storage 1 is x_1 and the outputs are surface runoff y_1 and infiltration y_{12}. The parameter associated with storage 1 is K_1 which is the maximum volume that q_1 can assume. y_{12} is the input to storage 2 and in general the outputs are y_{23} which is the input to free water storage and evapotranspiration rate, y_3. y_3 is not directly dependent on q_2 and is apparently considered to be zero during precipitation. The maximum storage K_2 is the parameter associated with storage 2. Storage 3 has a maximum capacity K_3 and the output is deep seepage y_3, having a maximum value of f_c.

By utilizing the principle of continuity and the known relationship between outputs (and inputs) and storage, we can write the state equation for the system, a coupled system of ordinary differential equations.

$$\frac{dq_1}{dt} = x_1 - y_1 - y_{12} = x_1 - U(q_1 - K_1)\, y_1 - a[(K_2 + K_3) - (q_2 + q_3)]^n - f_c \qquad (3)$$

where $U(q_1 - K_1) = 1$ when $q_1 - K_1 = 0$

$= 0$ otherwise.

Note that when $q_1 = K_1$, $\frac{dq_1}{dt} = 0$

and when $q_1 = 0$, $y_{12} = \min\left[x_1,\ a\,[(K_2 + K_3) - (q_2 + q_3)]^n + f_c\right]$

---

[8] W. H. Brutsaert, Personal Communication, June 1967.

[9] H. N. Holtan, C. B. England, and W. H. Allen, Jr., "Hydrologic Capacities of Soils in Watershed Engineering," International Hydrology Symposium. Paper No. 29.

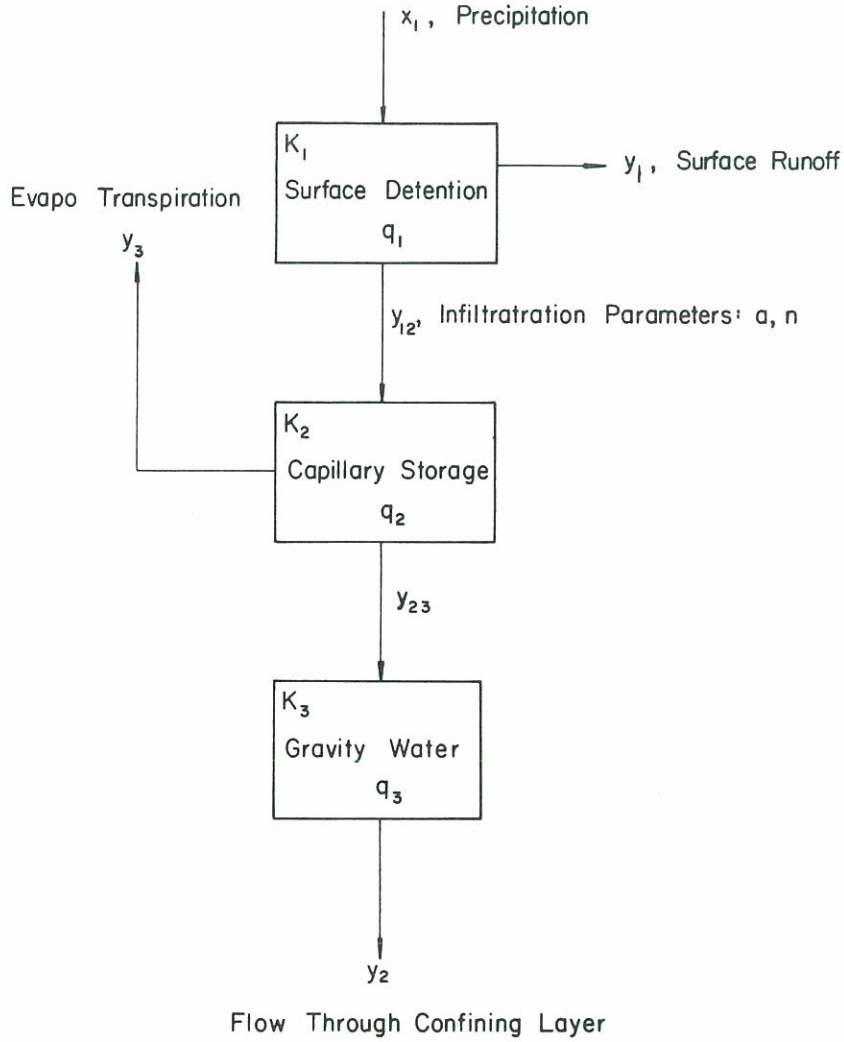

FIGURE 2

Schematic diagram of infiltration model

The rate of change in capillary storage is

$$\frac{dq_2}{dt} = y_{12} - y_{23} - y_3 = a\,[(K_2 + K_3) - (q_2 + q_3)]^n +$$

$$+ f_c - U(q_2 - K_2)\, y_{23} - U(q_2)\, y_3 \qquad (4)$$

where $U(q_2) = 1$ when $q_2 > 0$

$= 0$ otherwise

and $U(q_2 - K_2) = 1$ when $q_2 - K_2 = 0$

$= 0$ otherwise

$\frac{dq_2}{dt} = 0$ when $q_2 = K_2$

The rate of change in gravity storage is

$$\frac{dq_3}{dt} = y_{23} - y_2 = U(q_2 - K_2)\, y_{23} - y_2 \qquad (5)$$

$$= 0 \text{ when } q_3 = K_3$$

where $y_2 = \min\,[y_{23}, f_c]$ when $q = 0$

$y_2 = f_c$ when $q > 0$

A general solution to these equations is not available unless some restrictions are placed on the input x_1, so numerical methods are mandatory for practical cases. By assuming, however, that $x_1 > y_{12}$ it is possible to solve analytically for the infiltration capacity y_{12} for certain initial conditions and values of n and compare it with the solution obtained by Ibrahim and Brutsaert.

If we add the time derivatives of q_2 and q_3 we obtain

$$\frac{d}{dt}\,(q_2 + q_3) = y_{12} - y_{23} - y_3 + y_{23} - y_2 \qquad (6)$$

Consider the initial condition $(q_2)^o < K_2$, $(q_3)^o = 0$. Then, assuming zero evapotranspiration e.g. $y_3 = 0$, this equation becomes

$$\frac{d}{dt}(q_2 + q_3) = y_{12} = a[(K_2 + K_3) - (q_2 + q_3)]^n + f_c \qquad (7)$$

with the initial condition $(q_2)^o = K_2$ and $(q_3)^o = 0$, equation (6) becomes

$$\frac{d}{dt}(q_2 + q_3) = \frac{d}{dt}(q_3) = y_{12} - y_2 = a\,(K_3 - q_3)^n \qquad (8)$$

To compare these equations with those of Ibrahim and Brutsaert it is convenient to introduce the following normalizing quantities:

$$q_* = \frac{q_2 + q_3}{K_2 + K_3}, \qquad t_* = \frac{t\,f_c}{K_2 + K_3} \qquad (9)$$

After substituting these quantities into equation (7) we obtain

$$\frac{dq_*}{dt_*} = a\,\frac{(K_2 + K_3)^n}{f_c}\,(1 - q_*)^n + 1 \qquad (10)$$

which is also the expression for infiltration capacity. This equation can be solved analytically for certain values of n. For $n = 1$ the solution of equation (10) results in the Horton infiltration equation[10]. It can also be solved for other values of n although the resulting expressions are quite unwieldy.

For $n = 1.5$ (as compared with $n = 1.4$ as recommended by the authors) the relationship between t_* and accumulated infiltration q_* for the range $0 < q_* < 1$ is:

$$t_* = \frac{-2}{3bk}\left[\tfrac{1}{2}\log_e\left(\frac{k^2 - kz + z^2}{(k + z)^2}\right) + \sqrt{3}\,\tan^{-1}\frac{2z - k}{k\sqrt{3}}\right] + 2C_1 \qquad (11)$$

where $z = (1 - q_*)^{\frac{1}{2}}$

$$b = \frac{a(K_2 + K_3)^{3/2}}{f_c}$$

---

[10] D. E. Overton, "Mathematical Refinement of an Infiltration Equation for Watershed Engineering," USDA, Agricultural Research Service 41-99, Dec. 1964.

$$k = \sqrt[3]{1/b}$$

and C_1 is a constant of integration. For the initial condition

$$t_* = 0 , \quad q_* = 0$$

and with the parameters specified in the exapmple presented by Holtan, England and Allen, $C_1 = 0.0555$. Equation (11) is compared graphically with cumulative infiltration curves from Ibrahim and Brutsaert in Fig. 3. While the curves do not coincide because of differences in definition of the normalizing time, the slope of the line is very close to that obtained by Ibrahim and Brutsaert. Any comparison beyond the value of $q_* = 1$ is not valid because Holtan, England and Allen assume the presence of an impeding layer, whereas the analysis by Ibrahim and Brutsaert assumes a semi-infinite medium. Actually equation (11) is correct only for

$q_* < \dfrac{K_2}{K_2 + K_3}$, which of course has a limit of 1 for very fine soils.

Ragan's[11] general approach to the problem of determining the spatial and temporal variation of the rate of lateral inflow given initial conditions, boundary conditions and measurements of depth with time is sound. The strategy of solving the problem for a relatively simple system before moving to field situations is certainly advisable.

The agreement between the computed lateral inflows and the experimental inputs is quite good. Ragan attributes the discrepancies to errors in the relation between Manning's "n" and depth, as well as errors in measuring depth. While these are possible sources of error it might be fruitful to use an implicit finite difference scheme to evaluate q and v rather than the explicit scheme defined by equations (31-4) and (31-5) which is unstable for the determination of v and y, given q[12].

Although these equations are unstable for v and y, it is likely that this is not the case for the problem at hand. Certainly since y is bounded, the fluctuations can never be extremely severe. However, an implicit scheme may result in better approximations. Ragan may not have used the difference equations (31-5) and (31-6) as shown, since in his thesis (31-3) he introduced them in this form but later redefined both v_j and y_j such that the difference equations are stable. His redefinition of v_j was for example

$$v_j = \frac{Q_k + Q_I}{2 A_j}$$

---

[11] Robert M. Ragan, "The Determination of Local Inflows Entering a Channel," International Hydrology Symposium Paper No. 31.

[12] J. A. Liggett and D. A. Woolhiser, "Difference Solutions of the Shallow-Water Equation. Proc. ASCE, M 2, Apr. 1967. pp. 39-71.

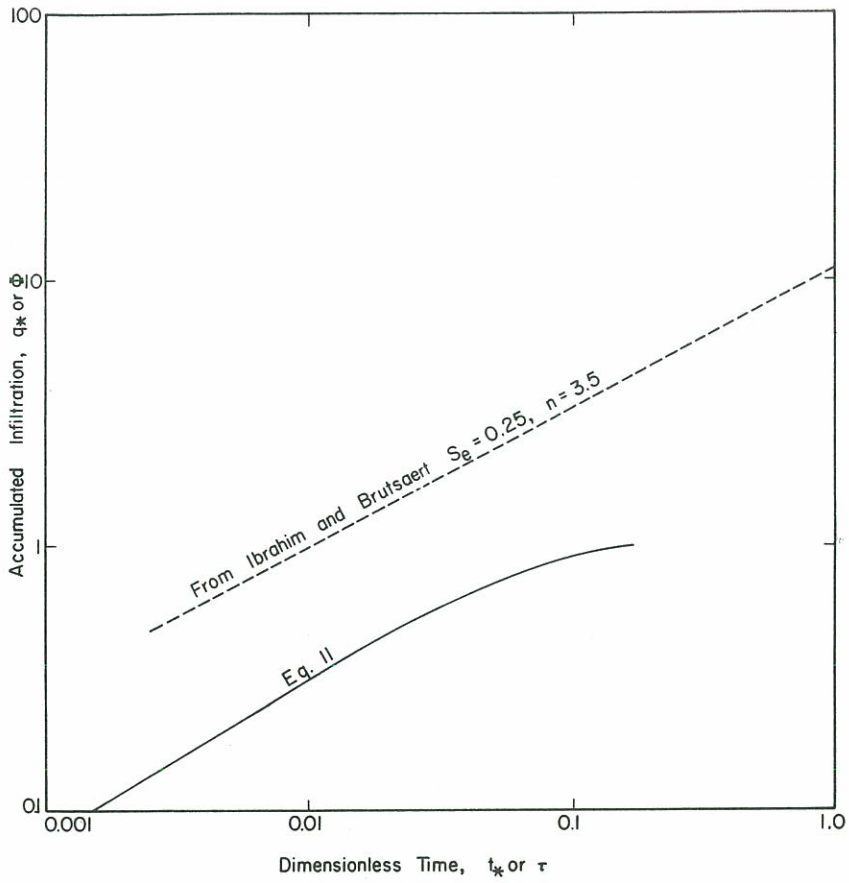

FIGURE 3

Comparison of empirical infiltration model with diffusion equation solution

Ragan refers to the quantity q in his finite difference scheme as representing the average discharge to a segment $2\Delta x$ during a time period Δt. This definition is somewhat confusing. If q in equation (31-5) is an average in Δt it could have been written in the subscripted form,

$$\frac{q_j + q_L}{2}$$

If it is an average over space and time as his statement implies, the expression

$$q = \frac{2q_L + q_I + q_k}{4}$$

is one possibility.

The magnitude of the errors in computed q at individual stations for this experimental system suggests that such errors for real streams would be much greater. However, in real streams an average lateral inflow over a reach of channel may be much more meaningful than estimates of a continuous function at discrete points because in real streams the lateral inflow is likely to be very erratic. In this case the errors will tend to average out and the answers may be quite reliable.

Dickinson's[13] statistical error model for a single discharge measurement should be useful in planning stream gaging. The advantage of a formal model such as this is that it forces one to consider all sources of error and to attempt to make some explicit statements with respect to the distributions of the errors or at least to estimate the first and second moments. Questions with regard to independence of errors must also be answered. By this mechanism, "areas of ignorance" can be charted and research initiated to eliminate them.

Dickinson's basic model differs very little from the model proposed by Carter and Anderson (32-2) in that both assume that the error in a single discharge measurement is a linear function of independent random variables. If the means and variances of the individual components of the error can be determined, this model is quite tractable because the mean and the variance of the error are the sums of the means and variances of the component errors respectively.

Carter and Anderson (32-2) assumed <u>a priori</u> that all component errors had a mean of zero and inferred that there is no bias in an individual measurement. Dickinson's expression for the mean error shows that bias can exist. Hopefully, data on the possible magnitude of this bias will be forthcoming.

Dickinson's expression for the variance of the error shows the importance of selecting stream sections with approximately equal discharges. He also considered the error due to oblique currents. The other error components had been recognized

---

[13] W. T. Dickinson, "An Error Model for a Single Discharge Measurement," International Hydrology Symposium Paper No. 32.

by Carter and Anderson but their dependence on the coefficient of variation of the point velocities and the coefficient of variation of the discharge had not been explicitly recognized.

Thirriot and Villeneuve [14] have presented the equation describing one-dimensional saturated flow through a porous media of finite length and have reduced it to a dimensionless form. Under the assumption that the variation of the saturated depth, h, is very small, Boussinesq's equation was linearized to the one-dimensional parabolic equation:

$$\frac{\partial h}{\partial t} = \frac{\partial^2 h}{\partial x^2} \quad (0 < x < 1, \quad t > 0)$$

with the boundary conditions

$$h(0, t) = f_1(t), \; h(1, t) = h_1$$

$$h(x, 0) = g(x)$$

The authors obtained an analytic expression for the stationary part of the solution when the water level at the upstream boundary followed a sinusoidal variation in time. The initial condition was arbitrary and was of no importance since the transient response was not desired. The theoretical results were verified experimentally.

The dimensionless results are presented in terms of the relative amplitude, and the phase angle as a function of the relative distances from the upstream boundary and the frequency of the disturbance. It is found that high-frequency waves are damped rather quickly.

This type of problem commonly occurs when a river or channel with a fairly constant elevation lies near a body of water subject to tidal fluctuations, but it could also apply to certian interactions between rivers or between rivers and lakes. The important limitations are: (1) flow must be one-dimensional, (2) the assumptions involved in linearizing the equations must be satisfied, and (3) the boundary conditions must be deterministic and periodic so they can be represented by a Fourier Series.

It is significant that four of the seven papers reviewed in this report have involved the use of the digital computer. While it is becoming repetitious to sing praises of the computer, it appears to me that this technological advance has provided us with a new laboratory--one where we can perform numerical experiments upon mathematical models. Such experiments can give us much greater insight into these models and can also assist in planning field or more conventional laboratory experiments.

---

[14] C. Thirriot and J. P. Villeneuve, "Consideration Sur La Fonction De Transfert Des Milieux Poreux Limites." International Hydrology Symposium Paper No. 28.